ford DESK LAMP

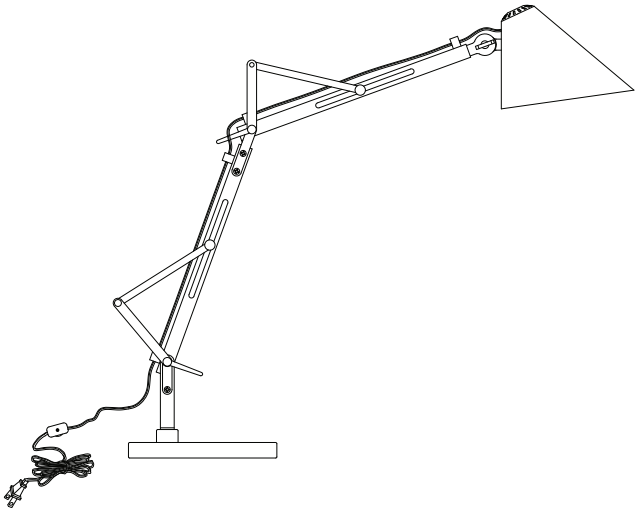

Thank you for purchasing the **Ford Desk Lamp.** This page lists all the contents included in the box. Please take the time to identify the hardware as well as the individual components to this product. As you unpack and prepare for assembly, place the contents on a carpeted or padded area to protect them from damage.

components

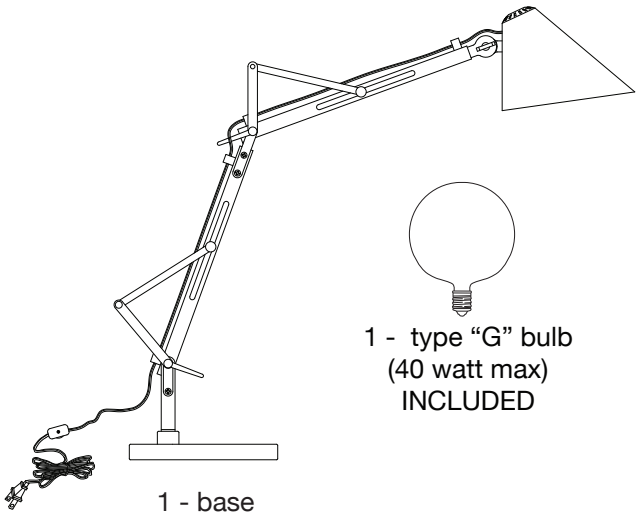

assembly

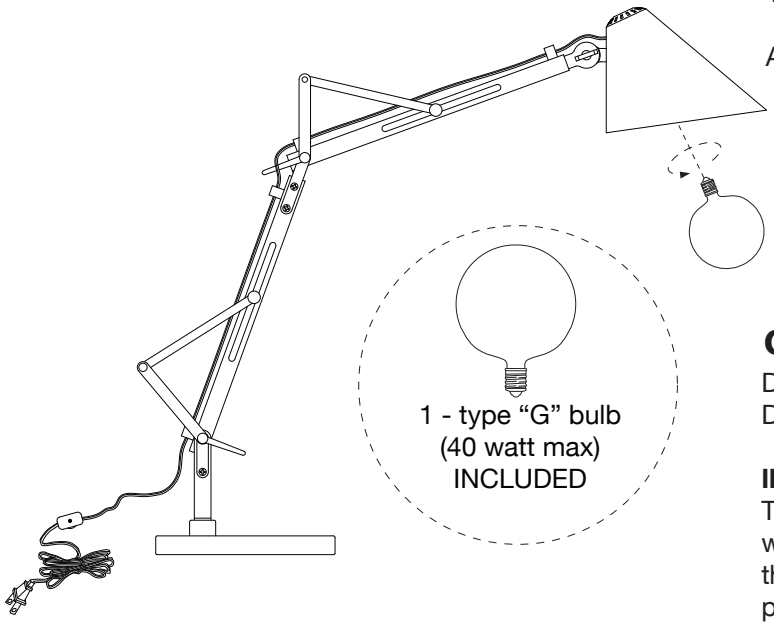

Carefully remove all components from box. Place **base** upright onto clean, padded surface. Install 1- **bulb** into socket.

Assembly is now complete.

cleaning & care

Do not use polishes or cleaners on your lamp. Dust surfaces with a dry soft cloth.

IMPORTANT SAFETY INSTRUCTIONS:
This portable lamp has a polarized plug (one blade is wider than the other) as a safety feature to reduce the risk of electric shock. This plug will fit in a polarized outlet only one way. If the plug does not fit fully in the outlet, reverse the plug. If it still does not fit, contact a qualified electrician. Never use with an extension cord unless plug can be fully inserted. Do not attempt to override this safety feature.