tribe PENDANT

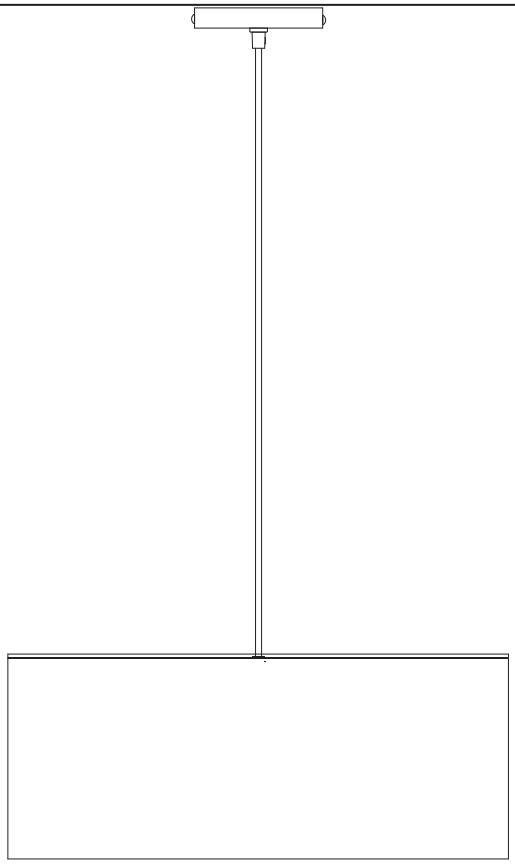

Thank you for purchasing the **Tribe Pendant.** This page lists all the contents included in the box. Please take the time to identify the hardware as well as the individual components to this product. As you unpack and prepare for assembly, place the contents on a carpeted or padded area to protect them from damage.
Note: 2 people are required to safely install this product.

components & hardware

Missing hardware?
Please call **800.606.6387**
for replacements.

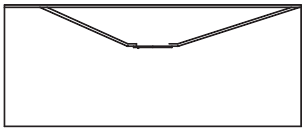

1 - lampshade

1 - pendant assembly

1 - socket ring

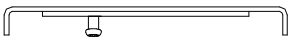

1 - mounting plate

2 - mounting bolts

2 - wire nuts

2 - canopy bolts

1 - 100 watt max type A standard bulb (NOT INCLUDED)

tools required

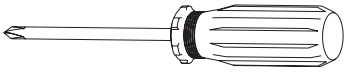

phillips head screwdriver

electrical tape

cleaning & care

Dust surfaces with a dry soft cloth.

IMPORTANT SAFETY INSTRUCTIONS:
If you are unsure about your ceiling/wall type or what mounting method you should use, consult a qualified professional or your local hardware store.

We recommend installation of this pendant lamp be performed by a licensed electrician.

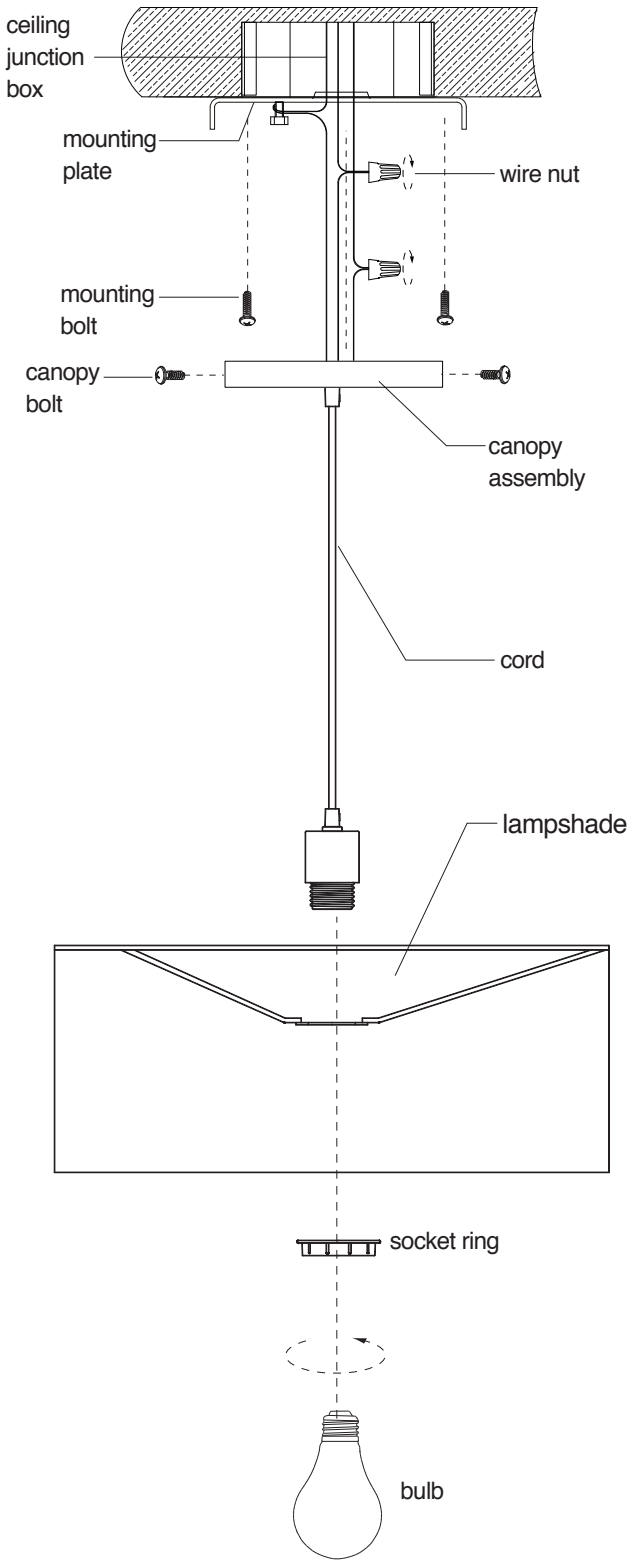

1) Shut off the main electrical supply from the main fuse box/circuit breaker.
2) Carefully unpack all fixture parts and hardware. Lay items out on a clear workspace.
3) Place the **mounting plate** over the center of the ceiling junction box.
4) Align holes in **mounting plate** with holes in junction box and attach with 2 **mounting bolts**, using a **phillips head screwdriver.**
5) Gently pull wiring down from ceiling junction box and allow it to hang.
6) Carefully inspect the pendant's fixture wires:
• *Neutral fixture wire* = white
• *Hot fixture wire* = black
• *Ground wire* = green
7) Attach the *ground wire* of the pendant assembly to the *ground wire* from the junction box and securely wrap around ground screw of the mounting plate.
8) Attach the *neutral fixture* wire from the pendant to the *neutral junction box wire* (usually white). Fasten each together with a **wire nut** and wrap the connection with **electrical tape**.
9) Attach the *hot fixture* wire from the pendant to the *hot junction box wire* (usually black). Fasten each together with a **wire nut** and wrap the connection with **electrical tape**.
DO NOT REVERSE THE HOT AND NEUTRAL CONNECTIONS OR SAFETY WILL BE COMPROMISED.
10) Gently tuck wire connections neatly into the ceiling junction box. Gently tuck cord and tension wire neatly into canopy assembly.
11) Fit **canopy assembly** onto **mounting plate** and secure with 2 **canopy bolts**, using a **phillips head screwdriver.**
12) Fit **lampshade** over socket and attach with a **socket ring**. Turn ring clockwise to secure.
13) Insert 1- **bulb (not included)** into socket. DO NOT EXCEED SPECIFIED WATTAGE.
14) Restore power to junction box and test fixture. Installation is now complete.