stash COFFEE TABLE

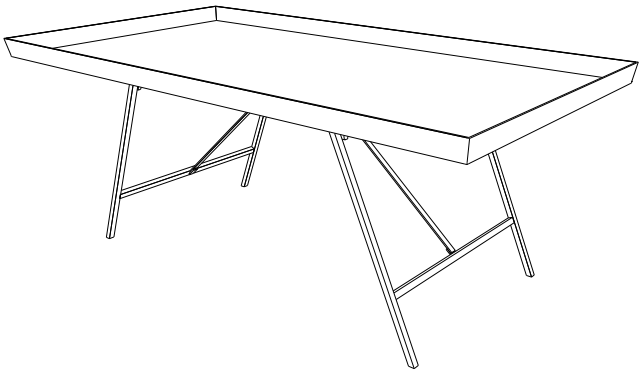

Thank you for purchasing the **Stash Coffee Table**. This page lists all the contents included in the box. Please take time to identify the hardware as well as the individual components of this product. As you unpack and prepare for assembly, place the contents on a carpeted or padded area to protect them from damage.
NOTE: 2 people are required to safely assemble this product.

hardware

2 - small hex nuts

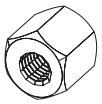

2 - large hex nuts

Missing hardware?
Please call **800.606.6387** for replacements.

tools required

1 - hex wrench (included)

components

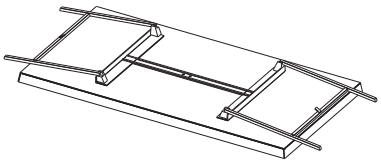

1 - tabletop

1 - support

With the assistance of another adult, place **tabletop** face down onto a clean, padded surface. Fit *threaded studs* of **tabletop** into corresponding holes of **support** as shown. Secure **support** to **tabletop** with 2 **large hex nuts** using a **hex wrench.**

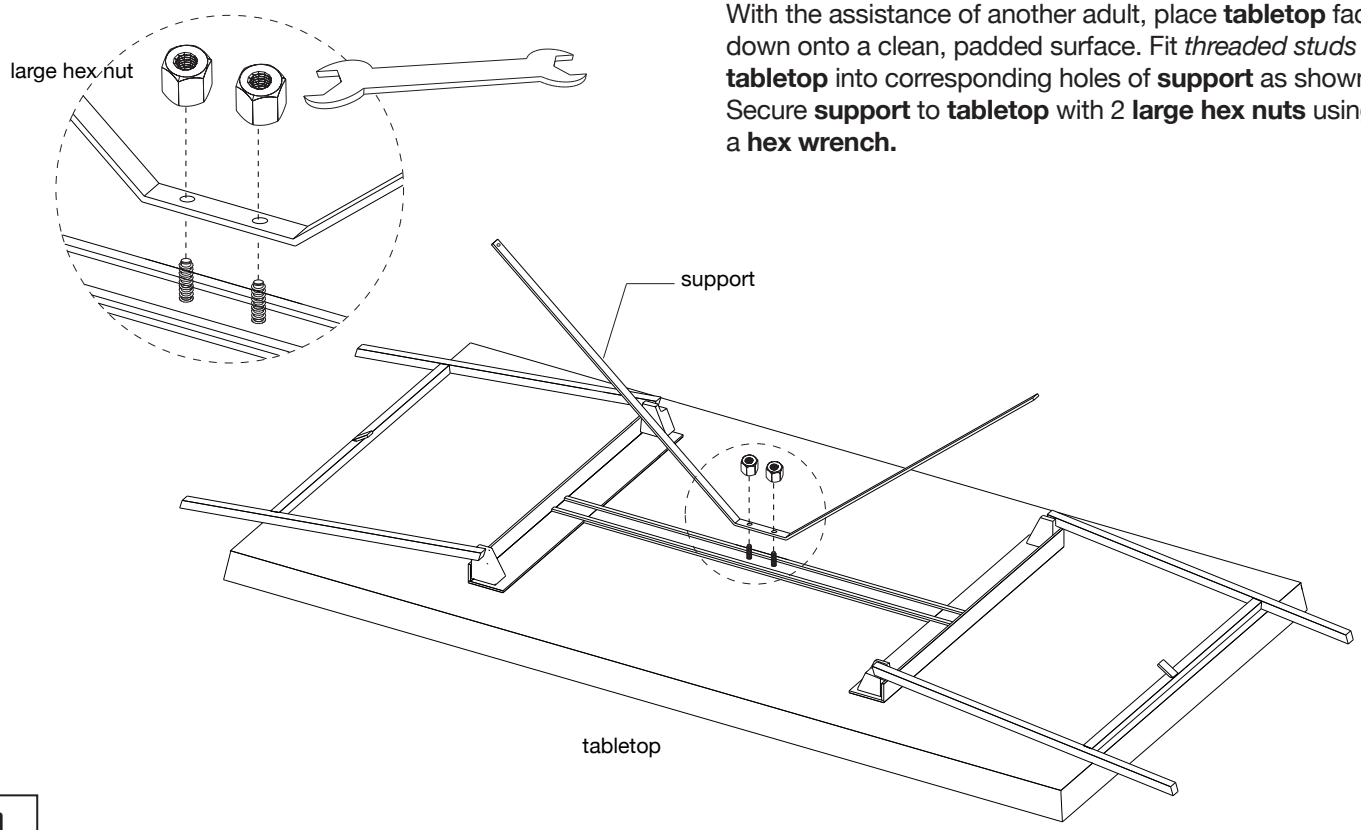

1

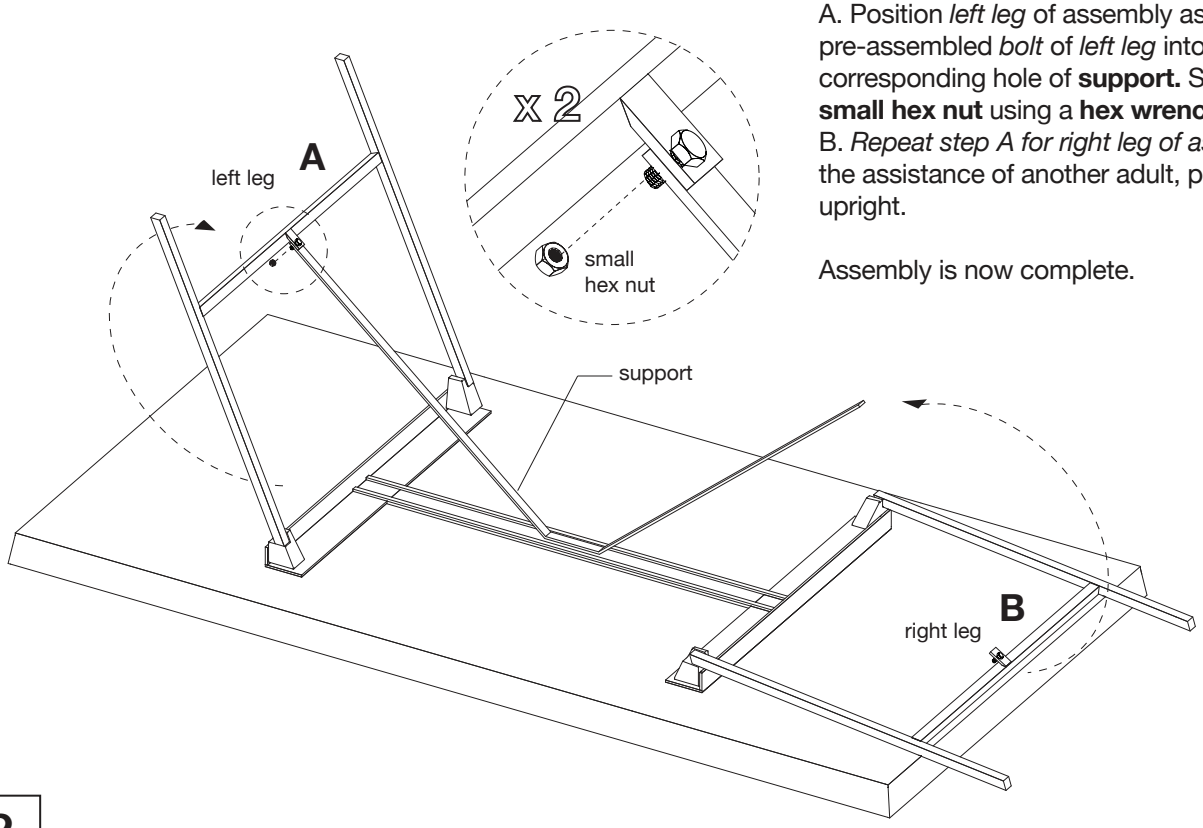

A. Position *left leg* of assembly as shown. Fit pre-assembled *bolt* of *left leg* into corresponding hole of **support.** Secure with 1 **small hex nut** using a **hex wrench.**
B. *Repeat step A for right leg of assembly.* With the assistance of another adult, position unit upright.

Assembly is now complete.

2

cleaning & care

Clean surfaces with a dry or damp soft cloth. Do not use abrasive cleaners. Do not use furniture wax or polish as the unit is finished with a protective clear lacquer. It is recommended to use coasters to protect surface from heat and water.