matchbox TALL CHEST

Thank you for purchasing the **Matchbox Tall Chest.** This page lists all the contents included in the box. Please take the time to identify the hardware as well as the individual components to this product. As you unpack and prepare for assembly, place the contents on a carpeted or padded area to protect them from damage.

Note: 2 people are required to safely assemble this product.

assembly hardware

4 - large cams | 12 - small cams | 21 - large wood dowels | 32 - small wood dowels

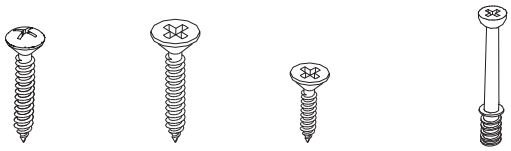

6 - medium screws | 39 - large screws | 8 - pull screws | 16 - cam screws

Missing hardware? Please call **800.606.6387** for replacements.

wall mounting hardware

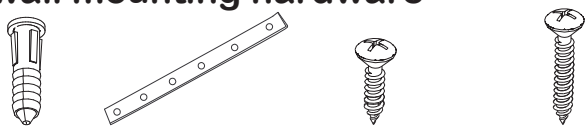

2 - plastic anchors | 2 - wall straps | 2 - small screws | 2 - medium screws

tools required

phillips head screwdriver

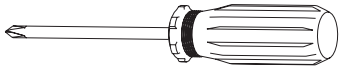

(We recommend the use of hand tools instead of power tools)

components

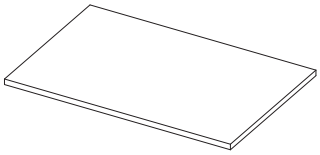

1 - top panel

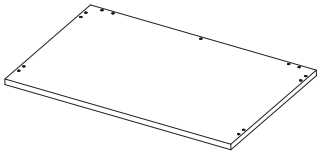

1 - bottom panel

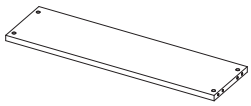

1 - support panel

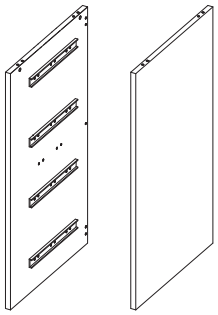

2 - side panels
(1 left, 1 right)

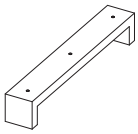

2 - legs

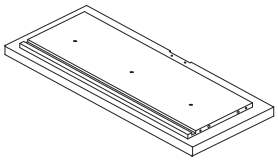

4 - drawer fronts

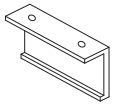

4 - pulls

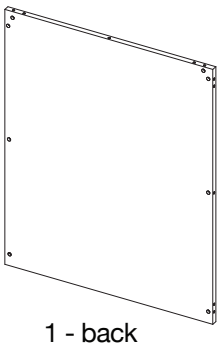

1 - back panel

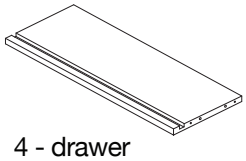

4 - drawer backs

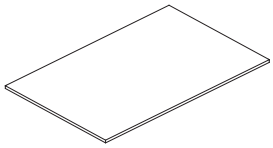

4 - drawer bottoms

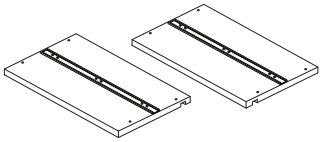

8 - drawer sides
(4 left, 4 right)

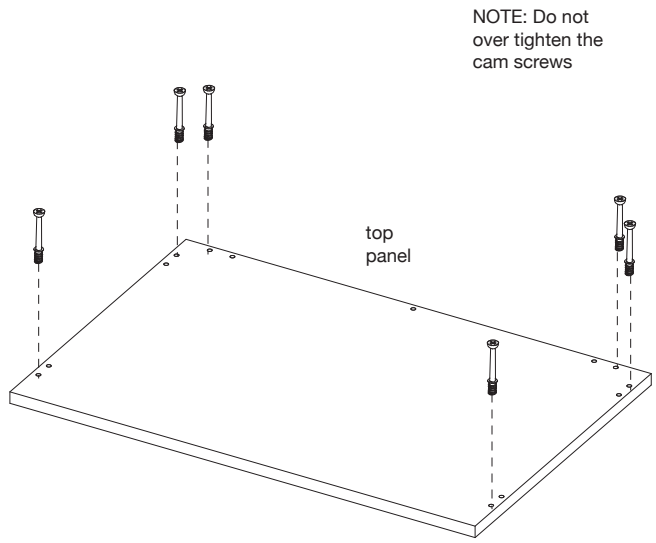

1 Insert 6 **cam screws** into **top panel** as shown. Secure, but do not over tighten, cam screws with a **phillips head screwdriver.**

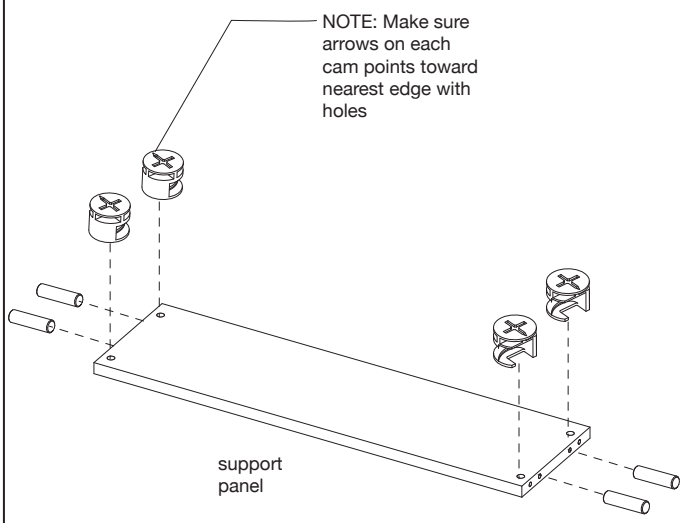

2 Insert 4 **small cams** and 4 **large wood dowels** into **support panel** as shown. Make sure arrows on each cam points toward nearest edge with holes.

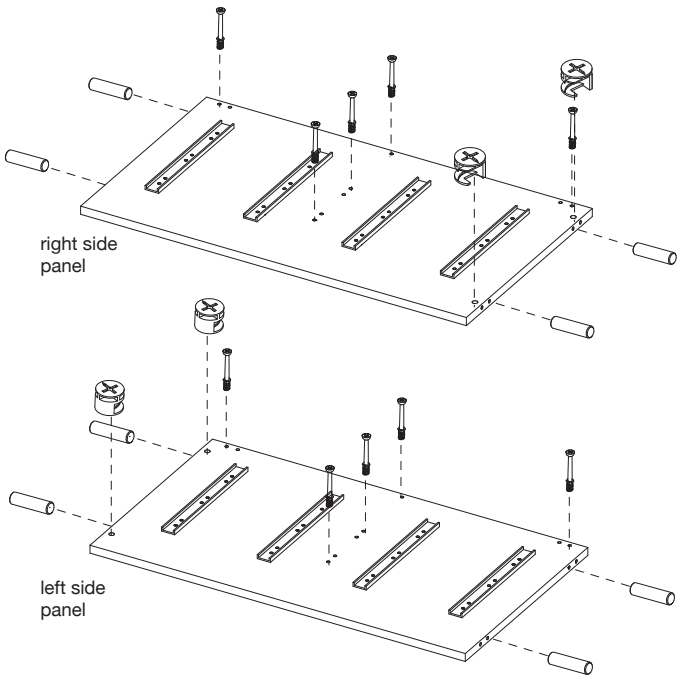

3 Insert 5 **cam screws**, 2 **large cams**, and 4 **large wood dowels** into **left and right side panels** as shown.

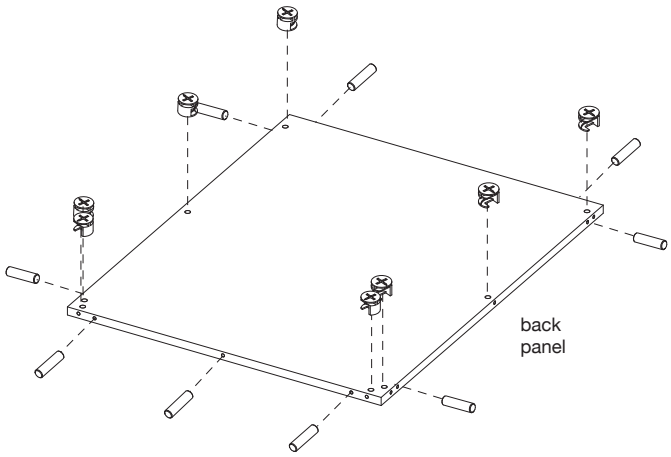

4 Insert 8 **small cams** and 9 **large wood dowels** into **back panel** as shown.

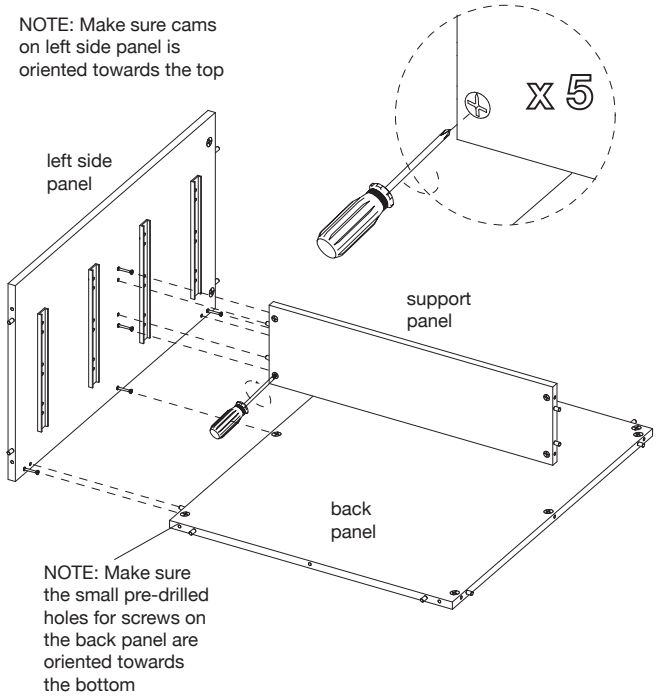

5 Fit dowels of **back panel** and **support panel** into corresponding holes of **left side panel** as shown. Using a screwdriver, turn each **cam** clockwise until it securely engages each cam screw.

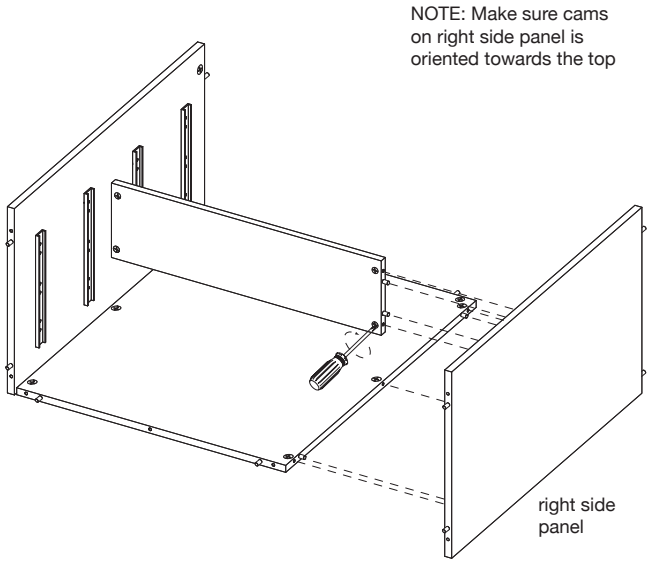

6 Fit dowels of assembled unit into corresponding holes of **right side panel** as shown. Secure all **cams**.

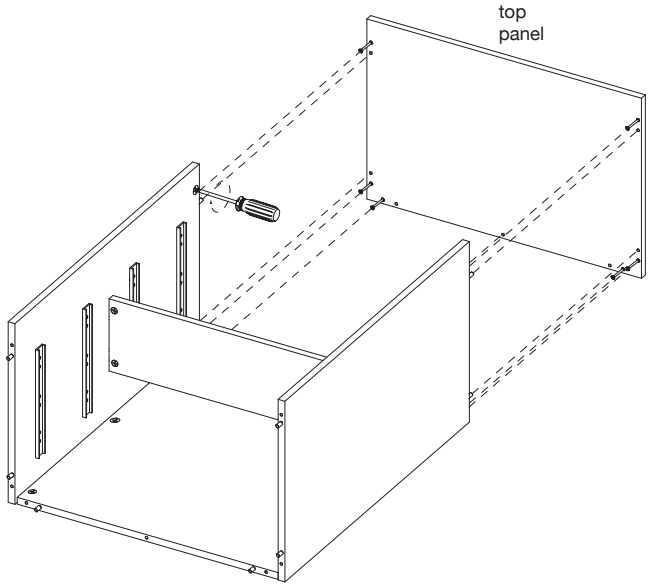

7 Fit dowels of assembled unit into corresponding holes of **top panel** as shown. Secure all **cams**.

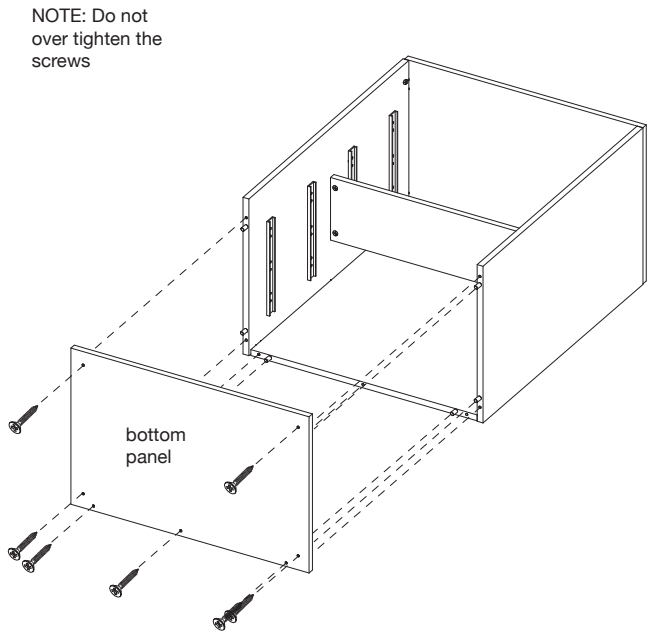

8 Fit dowels of assembled unit into corresponding holes of **bottom panel** as shown. Secure bottom panel with 7 **large screws**, using a screwdriver. Do not over tighten the screws.

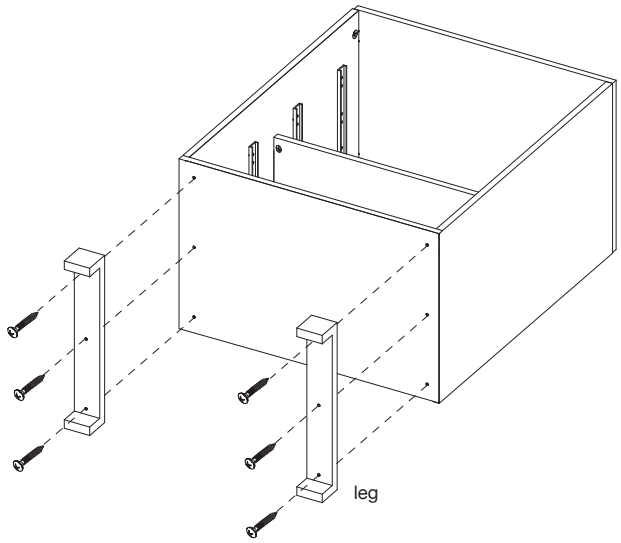

9 Attach 2 **legs** to bottom of assembled unit as shown with 3 **medium screws** per leg. Secure screws with a screwdriver.

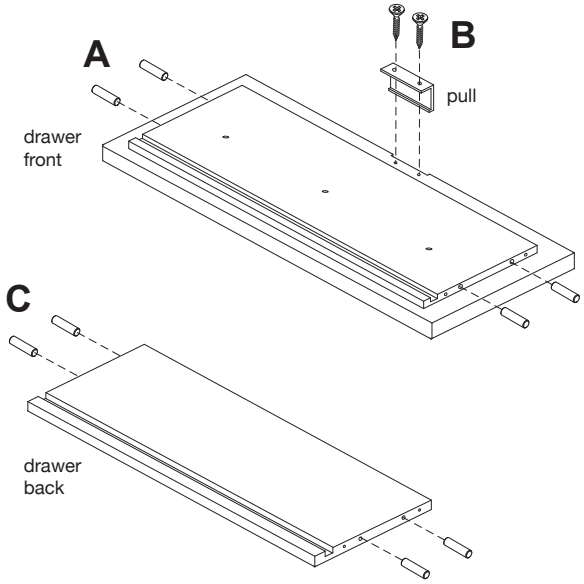

10 A. Insert 4 **small wood dowels** into **drawer front** as shown.
B. Attach 1 **pull** to **drawer front** with 2 **pull screws** as shown, using a screwdriver.
C. Insert 4 **small wood dowels** into **drawer back** as shown.

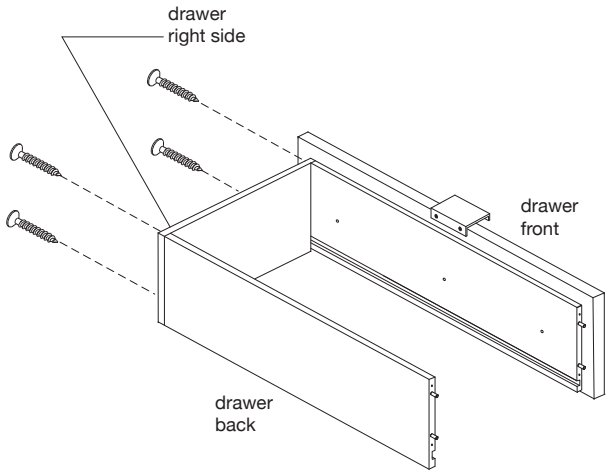

11 Fit dowels of **drawer front** and **drawer back** into corresponding holes of **drawer right side**. Secure side with 4 **large screws**.

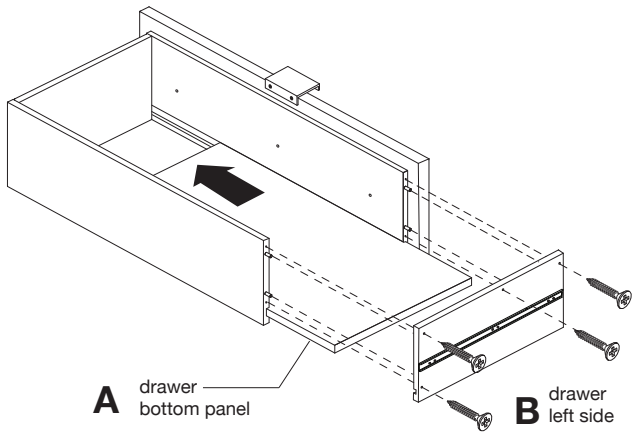

12 A. Slide **drawer bottom** into corresponding grooves of drawer assembly as shown.
B. Fit dowels of drawer assembly into corresponding holes of **drawer left side**. Secure with 4 **large screws.**
Repeat steps 10-12 for each remaining drawer assembly.

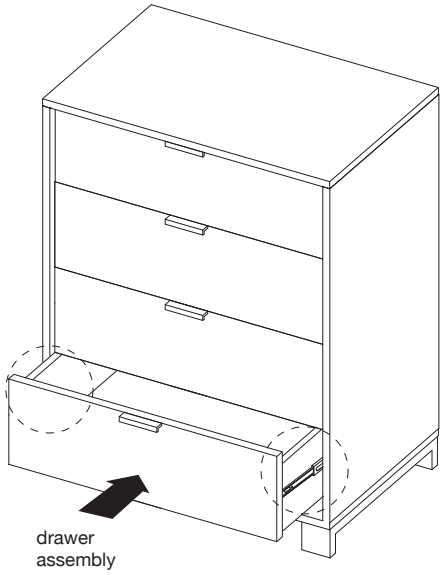

A) **Attach drawer assembly to assembled unit:**
Fit drawer glides of drawer assembly into corresponding drawer glides of unit. Push drawer all the way into the assembled unit. Test the drawer by opening and closing a couple of times to ensure it is attached.
Assembly is now complete.

B) **To remove drawer assembly from assembled unit:**
Fully extend drawer assembly from unit. Locate plastic tabs on left and right drawer glides. With even pressure, simultaneously lift the left tab and push down the right tab and pull the drawer from the assembled unit.

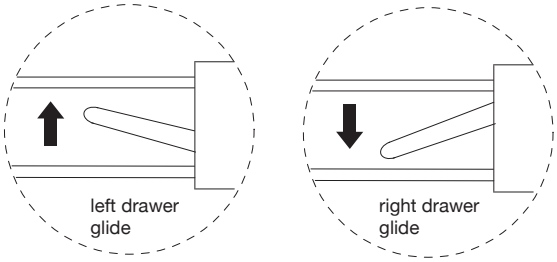

13

CLEANING AND CARE

Clean surfaces with a dry or damp soft cloth. Do not use abrasive cleaners. Do not use furniture wax or polish as the unit is finished with a protective clear lacquer.

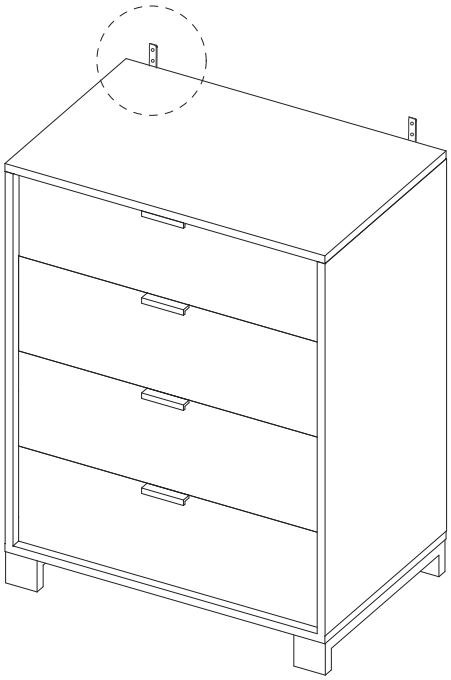

WALL

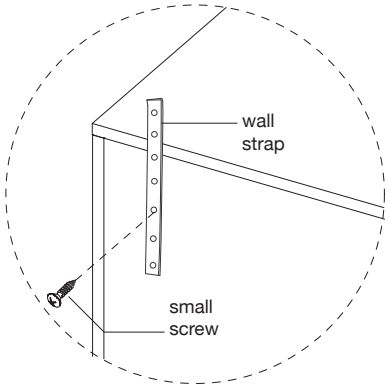

x 2

BACK OF UNIT

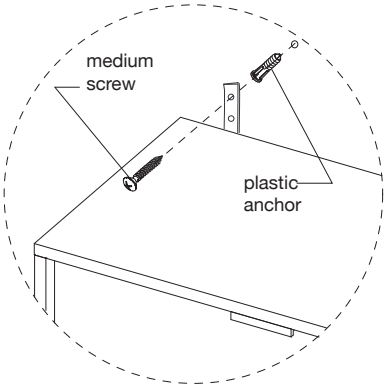

x 2

FRONT OF UNIT

optional wall mounting assembly

These instructions are for drywall mounting only. For safe installation it is essential to use hardware appropriate for your wall type. Mount to wood wall studs whenever possible. If you are unsure of what type of fasteners to use, consult your local hardware store or a qualified professional. This product is only deterrent, it is not a substitute for proper adult supervision.

A. Attach 2 **wall straps** to back of unit with 1 **small screw** per strap as shown. Secure, but do not over tighten with a **phillips head screwdriver.**
B. With the assistance of another adult, place the unit in desired location against the wall. Mark the location of the hole in the wall strap on the wall. Move the unit out of the workspace.
C. Drill holes slightly smaller in diameter than the plastic anchor. Insert 1 **plastic anchor** into each hole until they are flush to the wall.
D. Place the unit back into position against the wall. Insert 1 **medium screw** through each wall strap and into the plastic anchor.

Wall mounting is now complete.